MT900-SGDF6100-EC
Doppler Ultrasonic Flow Meter
Fixed wall Clamp-on

Operation & maintenance
Manual
REV 5/2018

Our CONTENTS

0B0B0B0PART 1 INTRODUCTIONS....3
6B6B6B6B1.1 PRINCIPLE....3
7B1.2 APPLICATION....3
8B1.3 NOTES FOR APPLICATION....4
9B7B7B7B1.4 TECHNICAL SPECIFICATIONS....4
26B1.4.1 TRANSMITTER....4
27B1.4.2 TRANSDUCER....4
PART 2 TRANSMITTER MOUNTING AND WIRING....5
10B8B8B8B2.1 MOUNTING LOCATION....5
11B9B9B9B2.2 TRANSMITTER WIRINGS....6
28B2.2.1 Transducer Wiring Connections....7
29B2.2.2 Power Supply Wiring Connections....7
30B2.2.3 4-20mA Output....7
31B2.2.4 Relay output....8
2B2B2B2BPART 3 CLAMP-ON TRANSDUCER INSTALLATION....9
11B9B9B9B3.1 TRANSDUCER MOUNTING LOCATION....9
12B10B10B10B3.2 TRANSDUCER INSTALLATION PROCEDURES....10
13B11B11B11B3.3 TRANSDUCER CABLES....10
14B12B12B12B3.4 COUPLANT....10
16B14B14B14B3.5 TRANSDUCER INSTALLATION....11
3B3B3PART 4 INSTRUMENT PROGRAMMING....11
20B18B18B18B4.1 GENERAL....11
21B19B19B19B4.2 KEYPAD OPERATION....11
40B4.2.1 List Item Selection Procedure....11
41B4.2.2 Numeric Value Entry Procedure....12
22B20B20B20B4.3 MENU STRUTURE....13
42B23B23B23B4.3.1 Totalizer Reset....13
43B24B24B24B4.3.2 Measurement UNIT Selection....13
44B25B25B25B4.3.3 Pipe Inside Diameter....13
45B26B26B26B4.3.4 Flow Display Mode....13
46B27B27B27B4.3.5 Engineering Units RATE....13
47B28B28B28B4.3.6 Engineering Units RATE INTERVAL....14
48B29B29B29B4.3.7 Engineering Units TOTALIZER....14
49B30B30B30B4.3.8 Engineering Units TOTAL Exponent....15
50B31B31B31B4.3.9 Fluid Specific Gravity....15
51B32B32B32B4.3.10 Low Flow Cut-off....15
52B33B33B33B4.3.11 Scale Factor....15
53B34B34B34B4.3.12 System Damping....16
54B35B35B35B4.3.13 CONFIGURE 4-20mA....16
55B36B36B36B4.3.14 Dual Relay Configuration....17
56B37B37B37B4.3.15 Change Password....18
57B38B38B38B4.3.16 SERVICE mode....18
23B4.4 OPERATING INSTRUCTION....20
PART 5 WARRANTY AND SERVICE....21
24B21B21B21B5.1 WARRANTY....21
25B22B22B22B5.2 SERVICE....21
PART 6 APPENDIX....21

PART 1 INTRODUCTIONS

1.1 PRINCIPLE

The Doppler ultrasonic flow meter is designed to measure volumetric flow of liquid within closed conduit, the pipe line must be filled full of liquids, there must be a certain amount of air bubbles or suspended solids in liquid.

Transducers are clamp-on or hot-tapped probe types, user don't need to shut down the pipe flow when install the clamp-on transducers.

The flow meter operates by transmitting an ultrasonic sound from its transmitting transducer, the sound will be reflected by useful sonic reflectors suspended within the liquid and recorded by the receiving transducer. If the sonic reflectors are moving within the sound transmission path, sound waves will be reflected at a frequency shifted (Doppler frequency) from the transmitted frequency. The shift in frequency will be directly related to the speed of the moving particle or bubble. This shift in frequency is interpreted by the instrument and converted to various user defined measuring units.

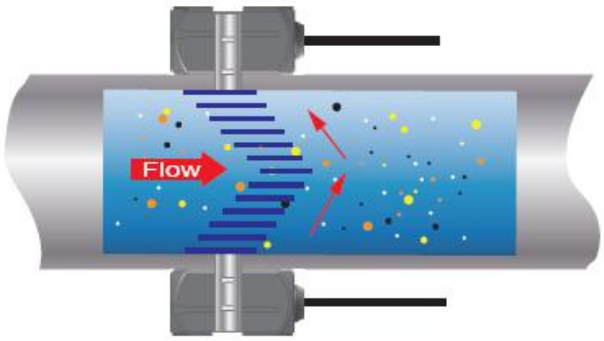

Fig 1.1

There must be some particles large enough to cause longitudinal reflection – particles larger than 100 micron.

When install the transducers, the installation location must have enough straight pipe length upstream and downstream. Commonly, the upstream needs 10D and downstream needs 5D straight pipe length, where D is pipe diameter.

1.2 APPLICATION

Raw sewage
Return activated sludge
Waste activated sludge
Ground water
Pulp and paper slurry
Chemical slurry
Drainage

Mining recirculation
Animal renderings

1.3 NOTES FOR APPLICATION

- When installing transducers, it need enough straight pipe;
- When straight pipe is not enough, by setting menu SERVICE, the flowmeter will still get high accuracy, and obtain a more accurate reading. more details, please see 4.3.16 SERVICE mode;
- The measured liquid must contain a certain amount of air bubbles or suspended solids. When the liquid contains air bubbles too much or too big, the bubbles occupy a certain volume, and then lead to larger flowmeter reading. In this case, it needs to recalibrate the flowmeter.
- When installing clamp-on transducers, the pipe material should have a good acoustical conductivity;
- When the transducer need be installed underground, recommend the insertion type.

1.4 TECHNICAL SPECIFICATIONS

TRANSMITTER

Measurement principle	Doppler ultrasonic
Resolution	0.25mm/s
Repeatability	0.5% of reading
Accuracy	0.5% -- 2.0% F.S.
Response time	2-60s for optional
Flow Velocity Range	0.05- 12 m/s
Liquid Types Supported	Liquids containing 100ppm of reflectors and at least 20% of the reflectors are larger than 100 micron.
Power Supply	AC: 85-265V DC: 24V/500mA
Enclosure type	Wall-mounted
Degree of protection	IP66 according to EN60529
Operating temperature	-20℃ to +60℃
Housing material	Fiberglass
Measurement Channels	1
Display	2 line × 8 characters LCD, 8-digit rate or 8-digit total (resettable)
Units	User Configured (English and Metric)
Rate	Rate and Velocity Display
Totalized	gallons, ft³, barrels, lbs, liters, m³,kg
Communication	4-20mA,relays for Totalizer and alarm output
keypad	6pcs buttons
Size	244(h)*196(w)*114(d)mm
Weight	2.4kg

TRANSDUCER

Transducers Type	Clamp-on
Degree of protection	IP65. IP67 or IP68 according to EN60529
Suited Liquid Temperature	Std. Temp.: -35℃~85℃ for short periods up to 120℃ High Temp.: -35℃~200℃ for short periods up to 250℃
Pipe diameter range	40-4000 mm
Transducer Size	60(h)*34(w)*32(d)mm

Material of transducer	Stainless steel
Cable Length	Std: 10m

PART 2 TRANSMITTER MOUNTING AND WIRING

2.1 MOUNTING LOCATION

Mount the transmitter in a location that is:

- Where little vibration exists
- Protected from falling corrosive fluids
- Within ambient temperature limits -20 to +60°C
- Out of direct sunlight. Direct sunlight may increase transmitter temperature to above the maximum limit

Fig 2.1 Fixed Transmitter

Mounting: Refer to Figure 2.2 in next page for fixed enclosure and mounting dimension details.

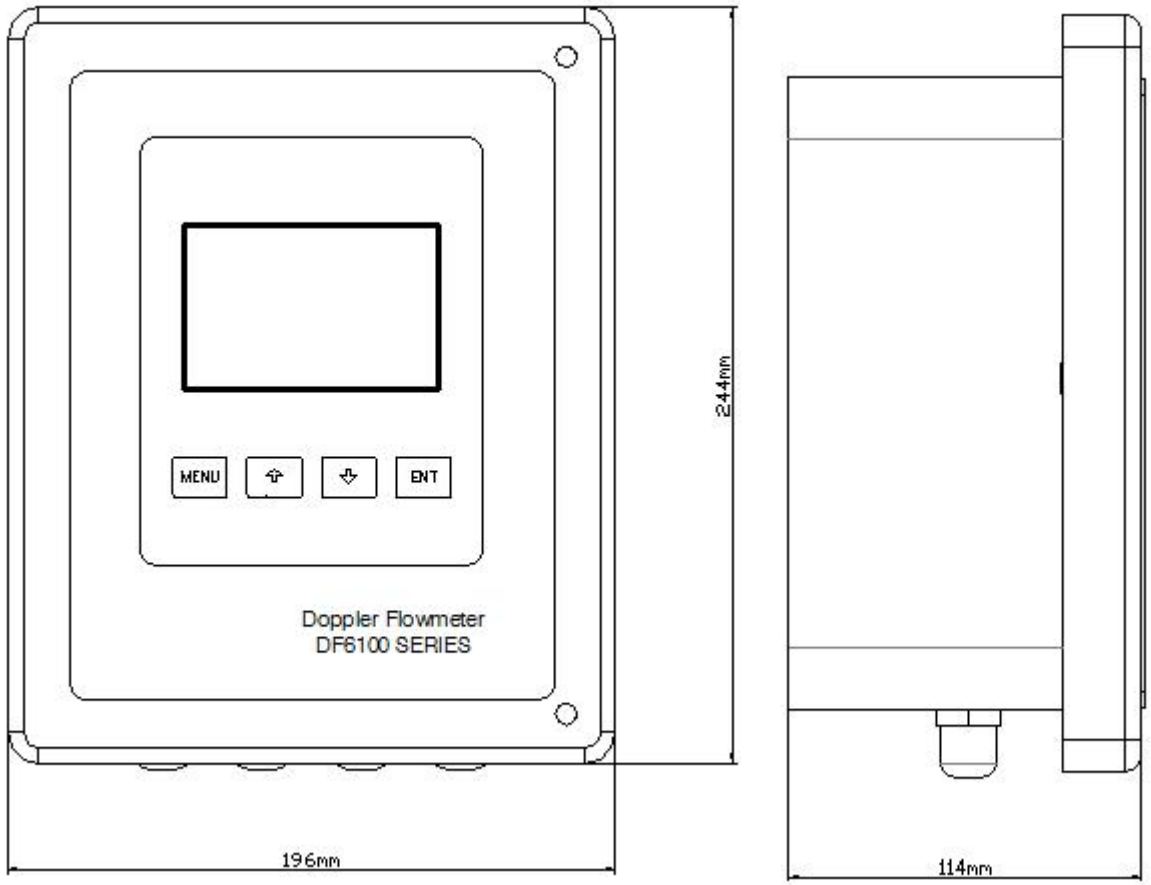

Fig 2.2 Transmitter Mounting Dimensions

2.2 TRANSMITTER WIRINGS

Fig 2.3 Transmitter Wiring Diagram

2.2.1 Transducer Wiring Connections

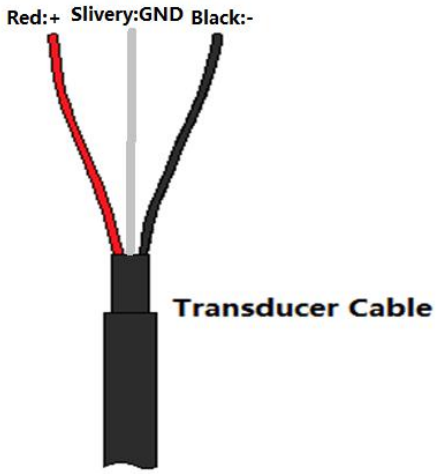

Fig 2.4 Transducer Cable

Please connect the Transducer A to Transmitter terminals "- +" TRANSMIT, red + to "+", and black "-" to "-", and connect the Transducer B to terminals "- +" RECEIVE.

2.2.2 Power Supply Wiring Connections

For fixed flow meter, the power supply can be connected to 85-265VAC or 24VDC.

2.2.3 4-20mA Output

The 4-20mA Output interfaces with most recording and logging systems by transmitting an analog current signal that is proportional to system flow rate.
The output load is up to 750 Ohms Max, internal power supply.
The circuit connection is shown as below:

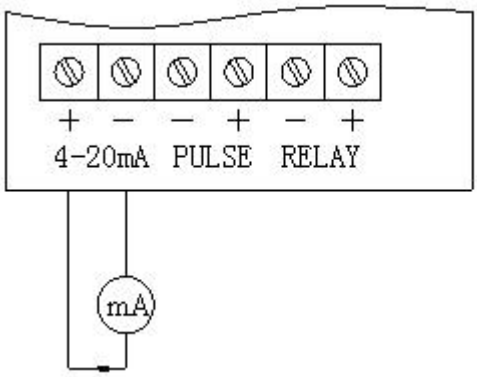

Fig 2.5 4-20mA

2.2.4 Relay output

Please refer to 4.3.14 Dual Relay Configuration to see Menu Configuration.

The relay operations are user configured via the front panel to act in flow rate alarm or error alarm, power supply interruption alarm and **totalizer pulse**. The relays are rated for 350VDC load voltage and have a load current of 0.12A.

Fig 2.6A shows a wiring diagram for totalizer pulse output connection, the wiring terminal is "PULSE -, +" in main board shown as Fig 2.3.

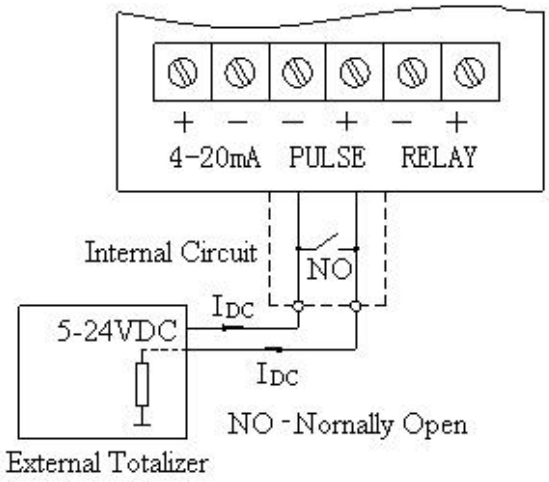

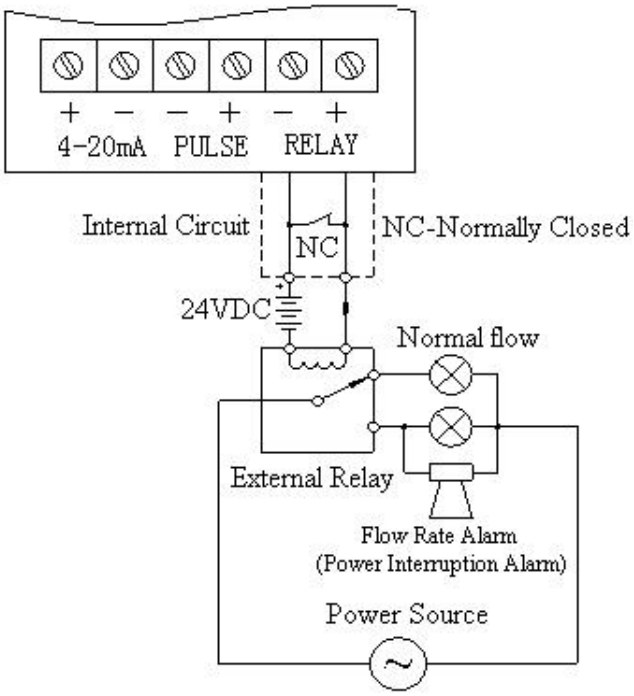

Fig 2.6A Passive Source Pulse Output

Fig2.6B Alarm for flow rate and power interruption

Fig 2.6B shows a wiring diagram for flow rate alarm, error alarm and transmitter power supply interruption alarm output connections, the wiring terminal is "RELAY -, +" in main board shown as Fig 2.5.

Note: Once the transmitter is powered on, the "RELAY -, +" output is normally closed state. The transmitter power supply interruption alarm output is automatically output alarm, if the transmitter is powered off, the "RELAY -, +" will automatically change normally closed state into normally open state.

PART 3 CLAMP-ON TRANSDUCER INSTALLATION

3.1 TRANSDUCER MOUNTING LOCATION

Placement of the ultrasonic transducer is the most critical step in achieving an accurate and reliable flow reading. All flow meters of this type rely on a full-pipe of fluid that is flowing symmetrically (evenly) in the pipe. Flow in partially filled pipes and immediately downstream of elbows, valves and pumps are unstable and will lead to unstable readings and nonlinearity.

Select a transducer mounting location with adequate straight runs of pipe, both upstream and downstream, to achieve stable readings. Examples of minimum upstream and downstream requirements are included in Table 3.1

Piping configuration And transducer position	**Upstream Dimension**	**Downstream Dimension**
	Pipe Diameters（*）	**Pipe Diameters（**）**
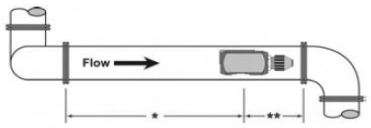	24	4
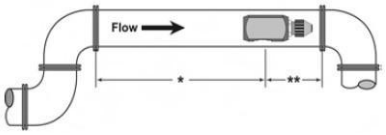	14	3
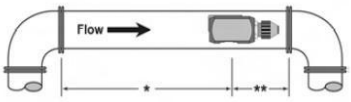	9	3
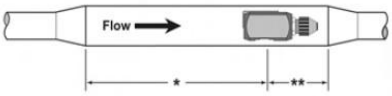	8	3
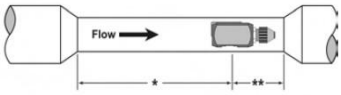	8	3
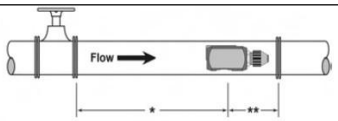	24	4

Table 3.1

The Doppler flow meter system will provide repeatable measurements on piping systems that do not meet these requirements, but the accuracy may be influenced to various degrees.

3.2 TRANSDUCER INSTALLATION PROCEDURES

Locate the reference mounting positions of 3 and 9 o'clock (180° symmetrically) as shown in Fig 3.1.

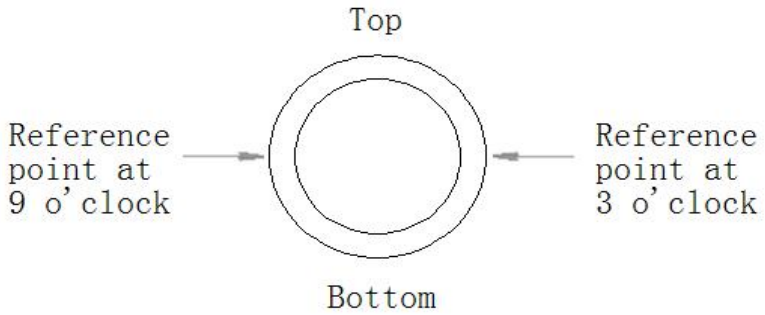

Fig 3.1 Two transducers must be installed 180° symmetrically.

Two transducers called A and B transducer, A is transmitting transducer and B is receiving transducer, they must be installed 180° symmetrically in order to have a more accurate measuring, shown as Fig 3.1.

All the transducers have a Serial Number corresponding to transmitter Serial Number.

3.3 TRANSDUCER CABLES

After the transducers A and B inserting into the pipe, the sensor cables should be routed to the transmitter location. Verify that the supplied cable length is sufficient to meet the installation requirements. While transducer cable extension is not generally recommended, if additional transducer cable is required, utilize **RG59 75 Ohm coaxial cable.**

CAUTION: The cables are designed to carry low level signals that are developed by the sensor. Care should be taken in routing the cables. Avoid running cables near sources of high voltage or EMI/RFI. Also avoid routing the cables in cable tray configurations, unless the trays are specifically used for other low voltage, low level signal cables.

3.4 COUPLANT

Assure an acoustically conductive path between the transducer face and the prepared piping surface, a coupling compound is employed. Enclosed with the Doppler flow meter system is tube of Dow Corning 111, silicone grease. This couplant is satisfactory for temporarily mounting the transducers to the pipe. If the installation is long-term (more than a few days), we recommends utilizing a silicone-based RTV such as Dow Corning RTV-732. If alternate couplant are utilized, the grease chosen must berated to not flow at the temperature of the pipe.

Spread an even layer of coupling compound, approximately 1/8 inch [3mm] thick, to the prepared transducer mounting areas of the pipe. Utilize Dow 111 for temporary mounting or Dow 732 for permanent mounting.

Mounting of high temperature transducers is similar to Doppler flow meter standard transducers. High temperature installations require acoustic couplant Dow Corning 112 that is rated not to flow at the temperature that will be present on the pipe surface.

3.5 TRANSDUCER INSTALLATION

1. Place each transducer under the strap with the flat face positioned towards the pipe. The notch on the back of the transducer will provide a mounting surface for the strap. The transducer cables must be facing in the same direction for proper operation.

NOTE: Large pipes may require two people for this procedure.

2. Tighten the strap tight enough to hold the transducers in place, but not so tight that all of the couplant squeezes out of the gap between the transducer face and pipe. Ensure that the transducers are squarely aligned on the pipe.
3. If the transducers are to be permanently mounted using Dow 732, the RTV must be completely cured before proceeding to Instrument Start up. Ensure that no relative motion between the transducer and pipe occurs during the 24 hour curing process. If

Dow 111 grease was used for temporary operation of the Doppler flow meter system, please proceed with the Instrument Start-up procedures. Transducer Installation is complete.

PART 4 INSTRUMENT PROGRAMMING

4.1 GENERAL

The Doppler flow meter contains a four-key tactile feedback keypad interface that allows the user to view and change configuration parameters used by the Doppler flow meter operating system.

The Doppler flow meter allows two basic sets of programming procedures: list item selection and numeric value entry.

4.2 KEYPAD OPERATION

Fig 4.1 Keyboard

4.2.1 List Item Selection Procedure

NOTE: If you are already in PROGRAM mode and the selection to be viewed or changed is already displayed, proceed to step 3 below. If you are in PROGRAM mode and the selection to be viewed or changed is not displayed, press the UP or DOWN arrow keys and repeat pressing until the desired selection appears. Proceed to step 3.

1. Press MENU key, then ID UNIT appears on the lower line of the display.

2. Press the DOWN arrow key to move to the desired selection.

3. Press ENTER to view the current selection.

4. If the current selection is desired, press ENTER to confirm. The unit will automatically advance to the next selection.

5. If the current selection must change, press the UP arrow key and repeat pressing to scroll through the available choices. Press ENTER to confirm your selection. The unit will automatically advance to the next selection.

6. To exit programming mode, press the MENU key. Depending on your position in the programming mode, up to three MENU key presses may be required to exit. The display will change to RUN mode.

4.2.2 Numeric Value Entry Procedure

NOTE: If you are already in PROGRAM mode and the selection to be viewed or changed is already displayed, proceed to step 3 below. If you are in PROGRAM mode and the selection to be viewed or changed is not displayed, press the UP or DOWN arrow keys and repeat pressing until the desired selection appears.
Proceed to step 3.

1. Press MENU key, then PROGRAM appears in the lower left-hand corner and ID UNITS appears on the lower line of the display.

2. Press the DOWN arrow key until the desired selection displays. The current numeric value for this selection appears on the upper line of the display.

3. If the current value is desired, press ENTER. The left most programmable number begins to flash. Press ENTER again to confirm and keep the current numeric value. The unit will automatically advance to the next menu selection.

4. If the current selection must be changed, press ENTER. The left most programmable number begins to flash. Use the UP arrow key to scroll through the digits 0-9 and change the flashing digit to the desired value. Use the DOWN arrow key to move the active digit to the right. Continue using the UP and DOWN arrow keys until all digits are selected.

5. Press ENTER to confirm your selection. The unit will automatically advance to the next selection.

6. To exit programming mode, press the MENU key. Depending on your position in the programming mode, up to three MENU key presses may be required to exit. The display will change to RUN mode.

4.3 MENU STRUTURE

4.3.1 Totalizer Reset

Press both the ENTER and the MENU keys when in the RUN mode to reset the totalizer. The message TOTAL RST will be displayed for a few seconds to indicate that the totalizer had been cleared. If a password has been set, the user must enter the correct password for the totalizer to be cleared.
The following sections define accessible in the program mode.

4.3.2 Measurement UNIT Selection

ID UNIT
INCH
MM
Select unit of measure for pipe ID entry. The choices are either inches (English) or millimeters (Metric) units.

4.3.3 Pipe Inside Diameter

PIPE ID – Pipe Inside Diameter Entry
According to **ID UNIT**, display ID INCH or ID MM. Enter the pipe inside diameter in inches if INCH was selected in ID UNIT; in millimeters if MM was selected.

4.3.4 Flow Display Mode

DISPLAY – Display Mode Selection
RATE
TOTAL
BOTH
DIAG

To display only the Flow Rate, select RATE. To display only the Flow Total, select TOTAL. To alternately display the Flow Rate and the Total, select BOTH. By selecting BOTH, the display will switch between RATE and TOTAL every 7 seconds. The DIAG selection places the display in the diagnostics mode. When selected, the display will show the measured frequency, the gain setting and the signal strength.

4.3.5 Engineering Units RATE

RATE UNT – Engineering Units for Flow Rate
VEL FEET - Velocity in Linear Feet
VEL MTRS - Velocity in Linear Meters

GALLONS - U.S. Gallons
LITERS - Metric Liters
MGAL - Millions of U.S. Gallons
CUBIC FT - Cubic Feet
M CU FT - Millions of Cubic Feet
CUBIC ME - Cubic Meters
MEGLTRS - Millions of Metric Liters
ACRE FT - Acre Feet
OIL BARR - Oil Barrels (42 U.S. Gallons)
LIQ BARR - Liquid Barrels (31.5 U.S. Gallons)
LBS - Pounds
KGS – Kilograms

Select a desired engineering unit for flow rate measurements. When Pounds (LBS) or Kilograms (KGS) is selected, the specific gravity for the fluid type must be entered for the SP GRAV setup parameter.

4.3.6 Engineering Units RATE INTERVAL

RATE INT – Time Interval for Flow Rate

MIN - Minutes
HOUR - Hours
DAY - Days
SEC - Seconds

Select a desired engineering unit for flow rate measurements.

4.3.7 Engineering Units TOTALIZER

TOTL UNT – Engineering Units for Flow Totalizer

GALLONS - U.S. Gallons
LITERS - Metric Liters
MGAL - Millions of U.S. Gallons
CUBIC FT - Cubic Feet
M CU FT - Millions of Cubic Feet
CUBIC ME - Cubic Meters
MEGLTRS - Millions of Metric Liters
ACRE FT - Acre Feet
OIL BARR - Oil Barrels (42 U.S. Gallons)
LIQ BARR - Liquid Barrels (31.5 U.S. Gallons)
LBS - Pounds
KGS - Kilograms

Select a desired engineering unit for flow accumulator (totalizer) Measurements

4.3.8 Engineering Units TOTAL Exponent

TOTL MUL – Flow Totalizer Multiplier

0.01 to 1,000,000

Utilize for setting the flow totalizer exponent. This feature is useful for accommodating a very large accumulated flow. The exponent is a ×10n multiplier, where "n" can be from –2 (×0.01) to +6 (×1,000,000).

Exponent	Display Multiplier
× PT 01	× 0.01
× PT 1	× 0.1
×1	× 1
×10	× 10
×100	× 100
×1000	× 1,000
×10000	× 10,000
×100000	× 100,000
×1000000	× 1,000,000

4.3.9 Fluid Specific Gravity

SP GRAV – Fluid Specific Gravity Entry

unitless

Allow adjustments to be made to the specific gravity (density) of the liquid. If Pounds (LBS) or Kilograms (KGS) is selected for either the RATE UNT or the TOTL UNT, a specific gravity must be entered for the correct mass flow to be calculated.

4.3.10 Low Flow Cut-off

FL C-OFF – Low Flow Cut-off A Low Flow Cut-off entry is provided to allow very low flow rates (that can be present when pumps are off and valves are closed) to be displayed as Zero flow. The value entered is in actual rate units.

When there is a reading display but no flow, please cut-off this value by "FL C-OFF".

But the 4-20mA output will not be "cut-off", it will be directly proportional to real flow value though the low value had been cut-off.

4.3.11 Scale Factor

SCALE F – Scale Factor

This function can be used to make the Doppler flow meter system agree with a different or reference flow meter, or to compensate for an installation where there is inadequate straight pipe to obtain a laminar flow profile, by applying a correction factor/multiplier to the readings and outputs. The

range of settings for this entry is 0.500 to 2.0. The following example describes using the SCALE F entry.

The Doppler flow meter is indicating a flow rate that is 3.0% higher than another flow meter located in the same pipe line. To make the Doppler flow meter indicate the same flow rate as the other meter, enter a value of 0.970, to lower the readings by 3.0%.

4.3.12 System Damping

DAMPING – System Damping

0-99 (Second)

Flow Filter Damping establishes a maximum adaptive filter value, the factory default setting is 10. Under stable flow conditions (flow varies less than 10% of reading), this adaptive filter will increase the number of successive flow readings that are averaged together up to this maximum value. If flow changes outside of the 10% window, the Flow Filter adapts by decreasing and allows the meter to react faster. Increasing this value tends to provide smoother steady-state flow readings and outputs.

4.3.13 CONFIGURE 4-20mA

OUTPUT1 – **Only** can configure as 4-20mA

4-20MA

YES

NO

Select YES, then configure and calibrate of the 4-20mA output

Programming

4-20mA

FLOW 4MA

FLOW 20MA

CAL 4MA

CAL 20MA

4-20 TEST

4-20mA Span

The FLOW 4MA and FLOW 20MA entries are used to set the span of the 4-20mA analog output. These entries are volumetric rate units that are equal to the volumetric units configured as Engineering Rate Units and Engineering Units Rate Interval. For example, to span the 4-20mA output from 0 GPM to +500 GPM, with 12mA being 250 GPM, set the FLOW 4MA and FLOW ： 20MA values as follows:

FLOW 4MA = 0.0

FLOW 20MA = 500.0

4-20mA Calibration

The 4-20mA output is factory calibrated and should not require Adjustment unless it is replaced.

The 4-20 CAL ? Entry allows fine adjustments to be made to the "zero" and span of the 4-20mA output. Select YES to access adjustment. To adjust the 4mA output, a milliammeter or reliable reference must be connected to the 4-20mA output.

4-20mA Test
4-20TEST – 4-20mA Output Test
Allow a simulated value to be output from the 4-20mA output. By incrementing this value, the 4-20mA output will transmit the indicated current value.

4.3.14 Dual Relay Configuration

It only can be configured in OUTPUT 2, the relays are rated for 350 VDC load voltage and have a load current of 0.12A.

OUTPUT2 **Relay** (One and only selection)
RELAY
NONE
4-20MA
RATE
Also select "RELAY", after this, it has two options: "PULSE TO" and "FLOWALM".

PULSE TO is corresponding to Wiring terminal "PULSE -, +", and only can be configured as **totalizer pulse output.** Please select **TOTAL** mode, it configures the relay to output a 50mSec pulse each time the display totalizer increments.

PULSE TO mode configures the relay to output a 50mSec pulse (contact changeover) each time the display totalizer increments.
(Based on customer orders statement for terminal contact)

FLOWALM is corresponding to Wiring terminal "RELAY -, +", only can be user configured as flow rate alarm, error alarm, or power supply interruption alarm output.

Flow Rate Relay configuration permits relay changeover at two separate flow rates allowing operation with an adjustable switch deadband. Fig 4.2 illustrates how the setting of the two set points influences Rate Alarm operation.

A single-point flow rate alarm would place the ON> setting slightly higher than the OFF< setting – allowing a switch deadband to be established. If a deadband is not established, switch chatter (rapid switching) may result if the flow rate is very close to the switch point.

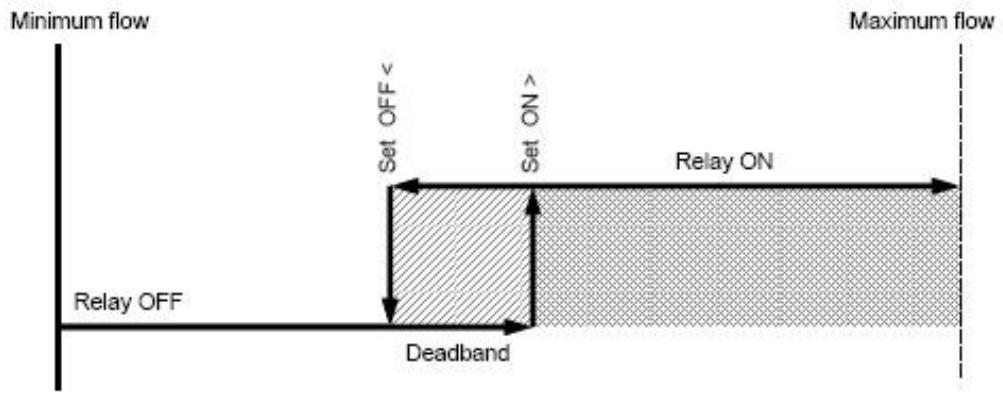

Fig 4.2 Single Point Alarm Operation

4.3.15 Change Password

PASSWORD – Change the Security Password
0-9999
By changing the Security Password from 0000 to some other value (any value between 0001-9999), configuration parameters will not be accessible without first entering that value when prompted. If the value is left at 0000, no security is invoked and unauthorized changes could be made. Access to resetting of the Totalizer is also protected by this password.

4.3.16 SERVICE mode

SERVICE mode allows access to the following parameters.
Select YES to access these parameters.

AGC MODE - Automatic Gain Control
GAIN POT - Digital Gain Control
FILTER - Hardware Filter Control
XDCR TYP – Transducer Type
LINEAR - 10 Point Linearization

1. AGC MODE –Gain Control Mode of Operation

NORMAL - Factory default Settings, Automatic Gain Control Mode, Used for generally conditions
HIGH - Automatic Gain Control Mode, Used for low signal strength conditions
MANUAL - Manual Gain Control Mode, AGC disabled, Used for not enough straight pipe or other special conditions

When NORMAL is selected, the unit will automatically control the gain and front end hardware filter for optimum measurement of the Doppler signal. Press ENTER key, the unit will automatically advance to XDCR TYP selection.

When sound is not getting through the pipe as well or other conditions that the signal is weak, meter reading is smaller than actual flow, In this case, Select HIGH to increase the signal strength and then increase in flow rate. Press ENTER key, the unit will automatically advance to XDCR TYP selection.

For applications where has not enough straight pipe or other special conditions, select the MANUAL mode. Typically, this would only be required at very low flow rates. When MANUAL mode is selected, the GAIN POT and FILTER settings are manually set. Automatic control is disabled.

2. GAIN POT – Digital Gain Pot
0-64

Use the arrow keys, increase or decrease the numerical value to set the signal gain level. Typically, optimum flow measurement is made when this value is between 20 and 30. Use the lowest value that provides an accurate and stable flow reading. This adjustment must be made in conjunction with the FILTER setting, and may be an iterative process.

When the measured liquid has more air bubbles or suspended solids, the GAIN POT may set a lower value. When the measured liquid has less air bubbles or suspended solids, the GAIN POT may set a higher value.

3. FILTER – Hardware Filter Selection

NONE - No Filter;
LOW – When the flowmeter is installed before or after a pump or valve, and the straight pipe is not enough, set FILTER (Hardware Filter Control) to LOW, so the flowmeter will get a more accurate reading;
MEDIUM - After the flowmeter installation location, connected rising pipeline, and the straight pipe is not enough, set FILTER (Hardware Filter Control) to MEDIUM, so the flowmeter will get a more accurate reading;
HIGH - High Filter;

4. XDCR TYPE – Transducer Type

DUAL – All Clamp-on Transducers, symmetrically insertion Transducers
PROBE - Insertion Probe Transducer

Select the appropriate transducer type to be connected to the Doppler flow meter transmitter. The selection invokes optimum hardware and software settings unique to the transducer architecture.

5. LINEAR – Entry of Linearization Data

(Users do not need to modify the data, Please consult factory technical personnel in specific situation)

The Linearization feature allows for correction of flow readings caused by non-linear flow measurement. This typically occurs when there is insufficient straight piping before or after the

location where the transducers are mounted.

Up to 10 linearization points may be entered. The microprocessor will perform a linear interpolation between data points entered in the linearization table and apply the associated correction factor to the measured flow rate.

Start by entering the number of linearization points to be entered at the NUM PTS prompt. If a value of 00 is entered, linearization is disabled.

The unit will then prompt for FREQ 1 to be entered. Enter the measured frequency corresponding to the flow rate for the first point. This can be obtained by running actual flow with the DISPLAY mode set to DIAG and reading the measured frequency, or by calculating the frequency if the flow rate in feet per second is known using the following formulas:
Dual: Clamp-On or symmetrically insertion Transducer:
Freq = Velocity (FPS) × 80 Hz
Probe: Insertion Probe Transducer:
Freq = Velocity (FPS) × 80 Hz

The unit will then prompt for COEFF 1 to be entered. This is the value that the measured flow rate will be multiplied by at this point.
Enter the coefficient or correction factor to be applied. The value entered must be between 0.5 and 1.5.

Repeat this procedure for all of the linearization points. When all of the points have been entered, the unit will return to the NUM PTS prompt. Press the Menu key to return to the main menu LINEAR prompt. Then using the arrow keys, move to the next setup parameter.

4.4 OPERATING INSTRUCTION

- In order to measure accurately, should wait for 2-5 minutes when meter starts to work, read the reading after display reading stable.
- Need to go in setting state, please press ENTER key.
- Refresh total flow only when run state.

PART 5 WARRANTY AND SERVICE

5.1 WARRANTY

The manufacturer provides one year warranty on all products, free of charge, but the users should be responsible for the one-way transportation fee from the customer to the factory.

5.2 SERVICE

The manufacturer provides instrument installation for our customers, and the charges will be made according to the cost.

(1) For any hardware failure of the instrument, we recommend that our customers send back the instrument to our factory for service, due to the fact that the instrument is made of microprocessors and it will be difficult to perform field maintenance. Before sending back the instrument, please try to contact the factory first to make sure what the problem is.
(2) For other operational problems, please contact our local distributor by telephone, fax or email. In most cases, the problem could be solved immediately.

PART 6 APPENDIX

SERIES SGDF6100-EC SOFTWARE MAP - General Operations

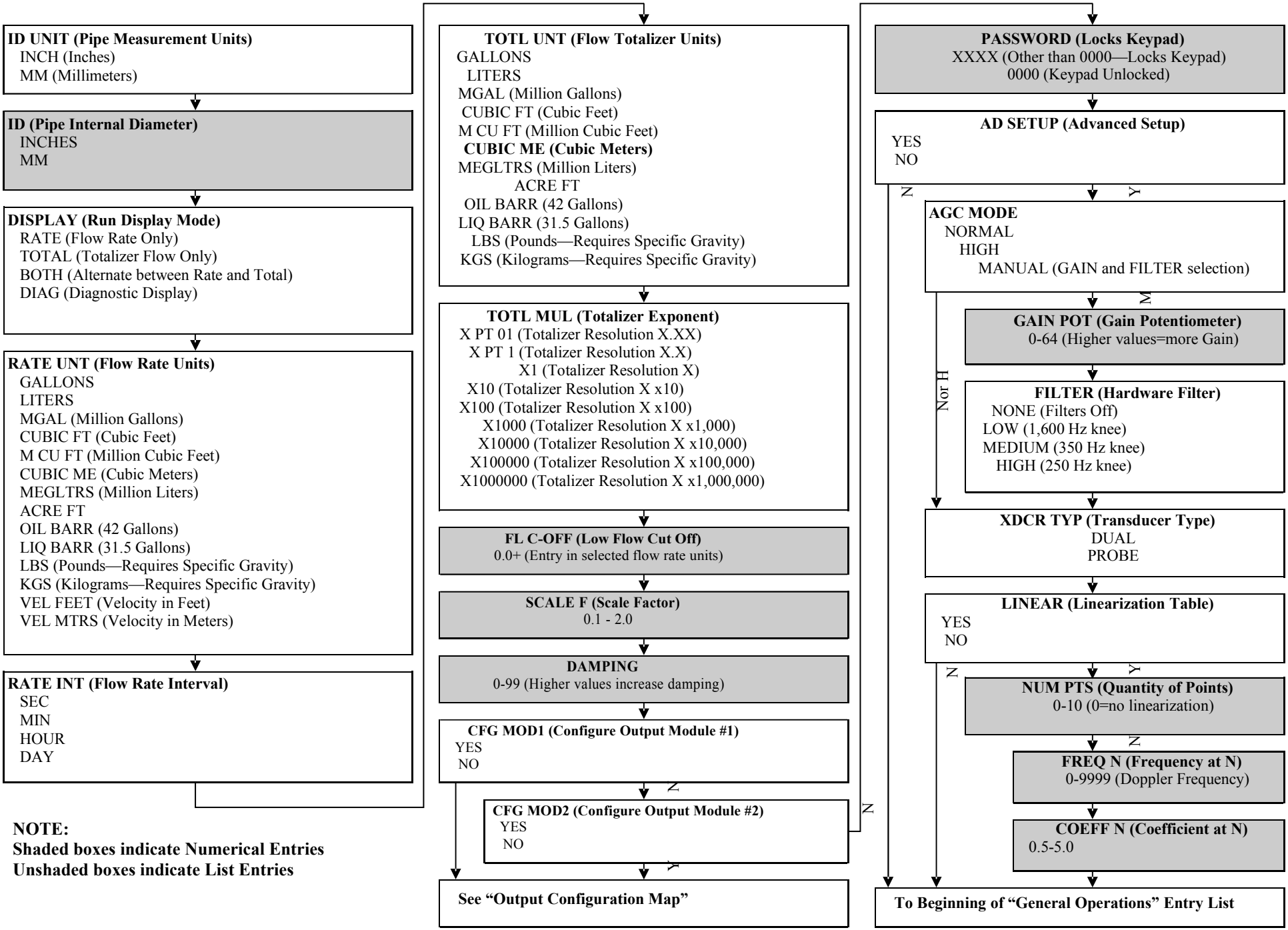

NOTE:
Shaded boxes indicate Numerical Entries
Unshaded boxes indicate List Entries

SERIES SGDF6100-EC SOFTWARE - Output Configuration Map

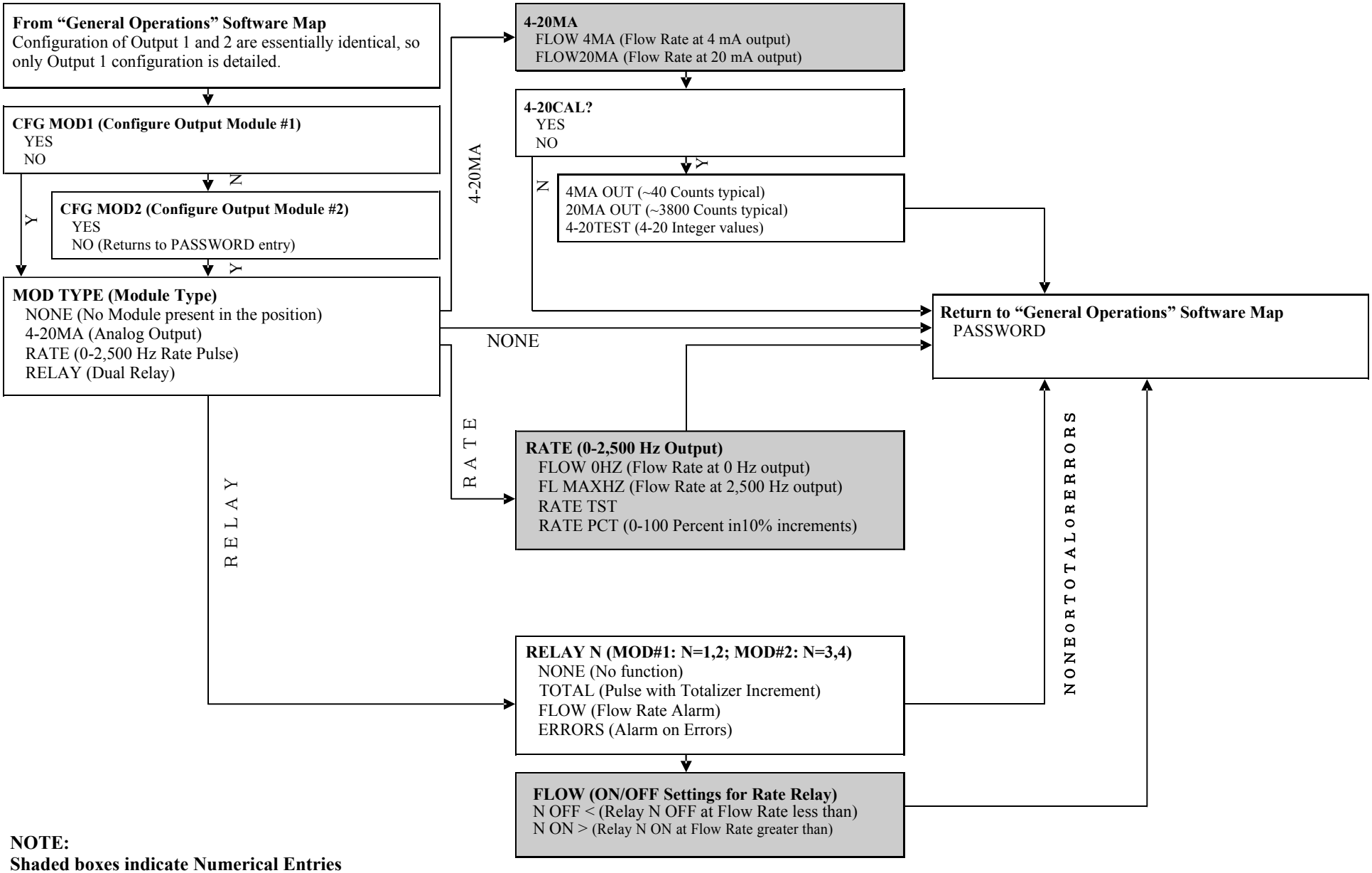

NOTE:
Shaded boxes indicate Numerical Entries
Unshaded boxes indicate List Entries

Fluid Properties

Fluid	Specific Gravity 20 degrees C	Sound Speed m/	Sound Speed ft	delta-v/degree C m/s/degree C	Kinematic Viscosity Centistokes	Absolute Viscosity Centipoise
Acetate, Butyl		1270	4163.			
Acetate, Ethyl	0.901	1085	3559.	4.4	0.489	0.441
Acetate, Methyl	0.934	1211	3973.		0.407	0.380
Acetate, Propyl		1280	4196.			
Acetone	0.	1174	3851.	4.5	0.399	0.316
Alcohol	0.	1207	3960.	4.0	1.396	1.101
Alcohol, Butyl	0.	1270	4163.	3.3	3.239	2.688
Alcohol, Ethyl	0.	1180	3868.	4	1.396	1.159
Alcohol, Methyl	0.791	1120	3672.	2.92	0.695	0.550
Alcohol, Propyl		1170	3836.			
Alcohol, Propyl	0.	1222	4009.		2.549	1.988
Ammonia	0.	1729	5672.	6.7	0.292	0.225
Anlline	1.	1639	5377.	4.0	3.630	3.710
Benzene	0.	1306	4284.	4.7	0.711	0.625
Benzol, Ethyl	0.867	1338	4389.		0.797	0.691
Bromine	2.	889	2916.	3.0	0.323	0.946
n-Butane	0.	1085	3559.	5.8		
Butyrate, Ethyl		1170	3836.			
Carbon dioxide	1.	839	2752.	7.7	0.137	0.151
Carbon tetrachloride	1.	926	3038.	2.5	0.607	0.968
Chloro-benezene	1.	1273	4176.	3.6	0.722	0.799
Chloroform	1.	979	3211.	3.4	0.550	0.819
Diethyl ether	0.	985	3231.	4.9	0.311	0.222
Diethyl Ketone		1310	4295.			
Diethylene glycol	1.	1586	5203.	2.4		
Ethanol	0.	1207	3960.	4.0	1.390	1.097
Ethyl alcohol	0.	1207	3960.	4.0	1.396	1.101
Ether	0.	985	3231.	4.9	0.311	0.222
Ethyl ether	0.	985	3231.	4.9	0.311	0.222
Ethylene glycol	1.	1658	5439.	2.1	17.208	19.15
Freon R12		774.2	2540			
Gasoline	0	1250	4098.			
Glycerin	1.	1904	6246.	2.2	757.10	953.94
Glycol	1.	1658	5439.	2.1		
Isobutanol	0.	1212	3976.			
Iso-Butane		1219.	4002			
Isopentane	0.	980	3215.	4.8	0.340	0.211
Isopropanol	0.	1170	3838.		2.718	2.134
Isopropyl alcohol	0.	1170	3838.		2.718	2.134
Kerosene	0.	1324	4343.	3.6		
Linalool		1400	4590.			
Linseed Oil	.925-.939	1770	5803.			
Methanol	0.	1076	3530.	2.92	0.695	0.550
Methyl alcohol	0.	1076	3530.	2.92	0.695	0.550
Methylene chloride	1.	1070	3510.	3.94	0.310	0.411
Methylethyl Ketone		1210	3967.			
Motor Oil (SAE	.88-.935	1487	4875.			
Octane	0.	1172	3845.	4.14	0.730	0.513

Oil, Castor	0.97	1477	4845.8	3.6	0.6	0.6
Oil, Diesel	0.80	1250	4101			
Oil (Lubricating X200)		1530	5019.9			
Oil (Olive)	0.91	1431	4694.9	2.75	100.000	91.2
Oil (Peanut)	0.94	1458	4783.5			
Paraffin Oil		1420	4655.7			
Pentane	0.626	1020	3346.5		0.3	0.2
Petroleum	0.876	1290	4229.5			
1-Propanol	0.78	1222	4009.2			
Refrigerant 11	1.49	828.3	2717.5	3.56		
Refrigerant 12	1.52	774.1	2539.7	4.24		
Refrigerant 14	1.75	875.2	2871.5	6.61		
Refrigerant 21	1.43	891	2923.2	3.97		
Refrigerant 22	1.49	893.9	2932.7	4.79		
Refrigerant 113	1.56	783.7	2571.2	3.44		
Refrigerant 114	1.46	665.3	2182.7	3.73		
Refrigerant 115		656.4	2153.5	4.42		
Refrigerant C318	1.62	574	1883.2	3.88		
Silicone (30 cp)	0.99	990	3248		30.0	29.7
Toluene	0.87	1328	4357	4.27	0.6	0.5
Transformer Oil		1390	4557.4			
Trichlorethylene		1050	3442.6			
1,1,1-Trichloro-ethane	1.33	985	3231.6		0.9	1.2
Turpentine	0.88	1255	4117.5		1.4	1.2
Water, distilled	0.996	1498	4914.7	-2.4	1.0	0.9
Water, heavy	1	1400	4593			
Water, sea	1.025	1531	5023	-2.4	1.0	1.0
Wood Alcohol	0.791	1076	3530.2	2.92	0.6	0.5
m-Xylene	0.868	1343	4406.2		0.7	0.6
o-Xylene	0.897	1331.	4368.4	4.1	0.9	0.8
p-Xylene		1334	4376.8		0.6	

Steel, Stainless Steel, P.V.C.

Standard Schedules

Nominal Pipe Size Inches	OUTSIDE DIAMETER	SCH.5		SCH. 10 (LTWALL)		SCH.20		SCH.30		STD.		SCH. 40		SCH. 60		X STG.		SCH. 80		SCH. 100		SCH. 120		SCH. 140		SCH. 180	
		ID	Wall	ID	Wall	ID	Wall	ID	Wall	ID	Wall	ID	Wall	ID	Wall	ID	Wall	ID	Wall	ID	Wall	ID	Wall	ID	Wall	ID	Wall
												1.049				0.957		0.957								0.815	
													0.133				0.179		0.179								0.250
1	1.315	1.185	0.065	1.097	0.109							1.380				1.278		1.278								1.160	
1.25	1.660	1.530	0.065	1.442	0.109					1.049	1.380		0.140				0.191		0.191								0.250
1.5	1.900	1.770	0.065	1.682	0.109					1.610	2.067	1.610				1.500		1.500								1.338	
2	2.375	2.245	0.065	2.157	0.109					2.469			0.145				0.200		0.200								0.281
2.5	2.875	2.709	0.083	2.635	0.120					3.068		2.067				1.939		1.939								1.687	
3	3.500	3.334	0.083	3.260	0.120								0.154				0.218		0.218								0.344
												2.469				2.323		2.323								2.125	
													0.203				0.276		0.276								0.375
		3.834		3.760						3.548		3.548				3.364		3.364									
			0.083		0.120						4.026		0.226				0.318		0.318			3.624		3.624		3.438	
3.5	4.000	4.334		4.260						4.026		4.026				3.826		3.826					0.438		0.438		0.531
			0.083		0.120						0.237		0.237				0.337		0.337			4.563		4.563		4.313	
4	4.500	5.345		5.295						5.047		5.047				4.813		4.813					0.500		0.500		0.625
			0.109		0.134						0.258		0.258				0.375		0.375			5.501		5.501		5.187	
5	5.563									6.065		6.065				5.761		5.761					0.562		0.562		0.719
		6.407		6.357				8.071			0.280		0.280	7.813			0.432		0.432	7.437		7.187		7.187		6.183	
6	6.625		0.109		0.134	8.125	0.250		0.277	7.981		7.981			0.406	7.625		7.625			0.594		0.719		0.719		1.221
		8.407		8.329		10.25	0.250	10.13			0.322		0.322	9.750			0.500		0.500	9.312		9.062		9.062		8.500	
8	8.625		0.109		0.148				0.310	10.02		10.020			0.500	9.750		9.562			0.719		0.844		0.844		1.125
		10.482		10.42							0.365																
10	10.750																										
				12.39				12.09		12.00		11.938		11.626		11.750		11.370		11.060		10.750		10.750		10.120	
					0.180				0.330		0.375		0.406		0.562		0.500		0.690		0.845		1.000		1.000		1.315
12	12.750			13.50		12.25	0.250	13.25		13.25		13.124		12.814		13.000		12.500		12.310		11.810		11.810		11.180	
					0.250	13.37	0.315		0.375		0.375		0.438		0.593		0.500		0.750		0.845		1.095		1.095		1.410
14	14.000			15.50		15.37	0.315	15.25		15.25		15.000		14.688		15.000		14.310		13.930		13.560		13.560		12.810	
					0.250	17.37	0.315		0.375		0.375		0.500		0.656		0.500		0.845		1.035		1.220		1.220		1.595
16	16.000	12.420		17.50		19.25	0.375	17.12		17.25		16.876		16.564		17.000		16.120		15.680		15.250		15.250		14.430	
			0.165		0.250	23.25	0.375		0.440		0.375		0.562		0.718		0.500		0.940		1.160		1.375		1.375		1.785
18	18.000			19.50				19.25		19.25		18.814		18.376		19.000		17.930		17.430		17.000		17.000		16.060	
					0.250				0.375		0.375		0.593		0.812		0.500		1.035		1.285		1.500		1.500		1.970
20	20.000																										
24	24.000																										
										29.25		29.250				29.000											
											0.375		0.375				0.500										
30	30.000			29.37				29.00																			
					0.315	29.00	0.500		0.500	35.25		35.250				35.000											
36	36.000										0.375		0.375				0.500										
42	42.000			35.37		35.00	0.500	35.00		41.25		41.250				41.000											
					0.315				0.500		0.375		0.375				0.500										
48	48.000									47.25		47.250				47.000											

Cast Iron Pipe

Standard Classes

	CLASS A			CLASS B			CLASS C			CLASS D			CLASS E			CLASS F			CLASS G			CLASS H		
Size (Inches)	O.D. Inch	I.D. Inch	Wall	O.D. Inch	I.D. Inch	Wall	O.D. Inch	I.D. Inch	Wall	O.D. Inch	I.D. Inch	Wall	O.D. Inch	I.D. Inch	Wall	O.D. Inch	I.D. Inch	Wall	O.D. Inch	I.D. Inch	Wall	O.D. Inch	I.D. Inch	Wall
3	3.80	3.02	0.39	3.96	3.12	0.42	3.96	3.06	0.45	3.96	3.00	0.48	7.22	6.06	0.58	7.22	6.00	0.61				7.38	6.00	0.69
4	4.80	3.96	0.42	5.00	4.10	0.45	5.00	4.04	0.48	5.00	3.96	0.52	9.42	8.10	0.66	9.42	8.10	0.66	7.38	6.08	0.65	9.60	8.00	0.8
6	6.90	6.02	0.44	7.10	6.14	0.48	7.10	6.08	0.51	7.10	6.00	0.55	11.60	10.12	0.74	11.60	10.00	0.80	9.60	8.10	0.75	11.84	10.00	0.92
8	9.05	8.13	0.46	9.05	8.03	0.51	9.30	8.18	0.56	9.30	8.10	0.60							11.84	10.12	0.86			
10	11.10	10.10	0.50	11.10	9.96	0.57	11.40	10.16	0.62	11.40	10.04	0.68												
12	13.20	12.12	0.54	13.20	11.96	0.62	13.50	12.14	0.68	13.50	12.00	0.75	13.78	12.14	0.82	13.78	12.00	0.89	14.08	12.14	0.97	14.08	12.00	1.04
14	15.30	14.16	0.57	15.30	13.98	0.66	15.65	14.17	0.74	15.65	14.01	0.82	15.98	14.18	0.90	15.98	14.00	0.99	16.32	14.18	1.07	16.32	14.00	1.16
16	17.40	16.20	0.60	17.40	16.00	0.70	17.80	16.20	0.80	17.80	16.02	0.89	18.16	16.20	0.98	18.16	16.00	1.08	18.54	16.18	1.18	18.54	16.00	1.27
18	19.50	18.22	0.64	19.50	18.00	0.75	19.92	18.18	0.87	19.92	18.00	0.96	20.34	18.20	1.07	20.34	18.00	1.17	20.78	18.22	1.28	20.78	18.00	1.39
20	21.60	20.26	0.67	21.60	20.00	0.80	22.06	20.22	0.92	22.06	20.00	1.03	22.54	20.24	1.15	22.54	20.00	1.27	23.02	20.24	1.39	23.02	20.00	1.51
24	25.80	24.28	0.76	25.80	24.02	0.89	26.32	24.22	1.05	26.32	24.00	1.16	26.90	24.28	1.31	26.90	24.00	1.45	27.76	24.26	1.75	27.76	24.00	1.88
30	31.74	29.98	0.88	32.00	29.94	1.03	32.40	30.00	1.20	32.74	30.00	1.37	33.10	30.00	1.55	33.46	30.00	1.73						
36	37.96	35.98	0.99	38.30	36.00	1.15	38.70	35.98	1.36	39.16	36.00	1.58	39.60	36.00	1.80	40.04	36.00	2.02						
42	44.20	42.00	1.10	44.50	41.94	1.28	45.10	42.02	1.54	45.58	42.02	1.78												
48	50.50	47.98	1.26	50.80	47.96	1.42	51.40	47.98	1.71	51.98	48.00	1.99												
54	56.66	53.96	1.35	57.10	54.00	1.55	57.80	54.00	1.90	58.40	53.94	2.23												
60	62.80	60.02	1.39	63.40	60.06	1.67	64.20	60.20	2.00	64.82	60.06	2.38												
72	75.34	72.10	1.62	76.00	72.10	1.95	76.88	72.10	2.39															
84	87.54	84.10	1.72	88.54	84.10	2.22																		

Ductile Iron Pipe

Standard Classes

Pipe Size (inches)	Outside Diameter (inches)	Class 50		Class 51		Class 52		Class 53		Class 54		Class 55		Class 56		CementLining Std./Double Thickness
		ID	Wall	ID	Wall	ID	Wall	ID	Wall	ID	Wall	ID	Wall	ID	Wall	
3	3.96	6.40	0.25	3.46	0.25	3.40	0.28	3.34	0.31	3.28	0.34	3.22	0.37	3.14	0.41	
4	4.80	8.51	0.27	4.28	0.26	4.22	0.29	4.16	0.32	4.10	0.35	4.04	0.38	3.93	0.44	
6	6.90	10.32	0.39	6.34	0.28	6.28	0.31	6.22	0.34	6.16	0.37	6.10	0.40	6.04	0.43	.123/.250
8	9.05	12.58	0.31	8.45	0.30	8.39	0.33	8.33	0.36	8.27	0.39	8.21	0.42	8.15	0.45	
10	11.10			10.46	0.32	10.40	0.35	10.34	0.38	10.28	0.41	10.22	0.44	10.16	0.47	
12	13.20			12.52	0.34	12.46	0.37	12.40	0.40	12.34	0.43	12.28	0.46	12.22	0.49	
14	15.30	14.64	0.33	14.58	0.36	14.52	0.39	14.46	0.42	14.40	0.45	14.34	0.48	14.28	0.51	
16	17.40	16.72	0.34	16.66	0.37	16.60	0.40	16.54	0.43	16.48	0.46	16.42	0.49	16.36	0.52	
18	19.50	18.80	0.35	18.74	0.38	18.68	0.41	18.62	0.44	18.56	0.47	18.50	0.50	18.44	0.53	
20	21.60	20.88	0.36	20.82	0.39	20.76	0.42	20.70	0.45	20.64	0.48	20.58	0.51	20.52	0.54	.1875/.375
24	25.80	25.04	0.38	24.98	0.41	24.92	0.44	24.86	0.47	24.80	0.50	24.74	0.53	24.68	0.56	
30	32.00	31.22	0.39	31.14	0.43	31.06	0.47	30.98	0.51	30.90	0.55	30.82	0.59	30.74	0.63	
36	38.30	37.44	0.43	37.34	0.48	37.06	0.62	37.14	0.58	37.40	0.45	36.94	0.68	36.84	0.73	
42	44.50	43.56	0.47	43.44	0.53	43.32	0.59	43.20	0.65	43.08	0.71	42.96	0.77	42.84	0.83	
48	50.80	49.78	0.51	49.64	0.58	49.50	0.65	49.36	0.72	49.22	0.79	49.08	0.86	48.94	0.93	.250/.500
54	57.10	55.96	0.57	55.80	0.65	55.64	0.73	55.48	0.81	55.32	0.89	55.16	0.97	55.00	1.05	

FPS TO GPM CROSS - REFERENCE (Schedule 40)

Nominal Pipe (Inches)	I.D. INCH	1	1.5	2	2.5	3	3.5	4	4.5	5	5.5	6	6.5	7	7.5	8	8.5	9
1	1.05	2.6989	4.0484	5.3978	6.7473	8.097	9.4462	10.796	12.145	13.490	14.844	16.190	17.540	18.890	20.240	21.590	22.941	24.290
1.25	1.38	4.6620	6.9929	9.3239	11.655	13.99	16.317	18.648	20.979	23.310	25.641	27.970	30.300	32.630	34.960	37.300	39.627	41.958
1.5	1.61	6.3454	9.5182	12.691	15.864	19.04	22.209	25.382	28.555	31.730	34.900	38.070	41.250	44.420	47.590	50.760	53.936	57.109
2	2.07	10.489	15.734	20.979	26.224	31.47	36.713	41.958	47.202	52.450	57.692	62.940	68.180	73.430	78.670	83.920	89.160	94.405
2.5	2.47	14.935	22.402	29.870	37.337	44.80	52.272	59.740	67.207	74.670	82.142	89.610	97.080	104.50	112.00	119.50	126.95	134.41
3	3.07	23.072	34.608	46.144	57.680	69.22	80.752	92.288	103.82	115.40	126.90	138.40	150.00	161.50	173.00	184.60	196.11	207.65
3.5	3.55	30.851	46.276	61.702	77.127	92.55	107.98	123.40	138.83	154.30	169.68	185.10	200.50	216.00	231.40	246.80	262.23	277.66
4	4.03	39.758	59.636	79.515	99.394	119.3	139.15	159.03	178.91	198.80	218.67	238.50	258.40	278.30	298.20	318.10	337.94	357.82
5	5.05	62.430	93.645	124.86	156.07	187.3	218.50	249.72	280.93	312.10	343.36	374.60	405.80	437.00	468.20	499.40	530.65	561.87
6	6.06	89.899	134.85	179.80	224.75	269.7	314.65	359.60	404.55	449.50	494.45	539.40	584.30	629.30	674.20	719.20	764.14	809.09
8	7.98	155.89	233.83	311.78	389.72	467.7	545.61	623.56	701.50	779.40	857.39	935.30	1013.0	1091.0	1169.0	1247.0	1325.1	1403.0
10	10.02	245.78	368.67	491.56	614.45	737.3	860.23	983.12	1106.0	1229.0	1351.8	1475.0	1598.0	1720.0	1843.0	1966.0	2089.1	2212.0
12	11.94	348.99	523.49	697.99	872.49	1047.0	1221.5	1396.0	1570.5	1745.0	1919.5	2094.0	2268.0	2443.0	2617.0	2792.0	2966.5	3141.0
14	13.13	422.03	633.04	844.05	1055.1	1266.0	1477.1	1688.1	1899.1	2110.0	2321.1	2532.0	2743.0	2954.0	3165.0	3376.0	3587.2	3798.2
16	15.00	550.80	826.20	1101.6	1377.0	1652.0	1927.8	2203.2	2478.6	2754.0	3029.4	3305.0	3580.0	3856.0	4131.0	4406.0	4681.8	4957.2

FPS TO GPM: GPM = (PIPE ID)² X VELOCITY IN FPS X 2.45

GPM TO FPS: $FPS = \frac{GPM}{(ID)^2 \times 2.45}$

FPS X .3048 = MPS

GPM X .0007 = GPD

GPM X 3.7878 = LPM

FPS TO GPM CROSS - REFERENCE (Schedule 40)

Nominal Pipe (Inches)	I.D. INCH	1	1.5	2	2.5	3	3.5	4	4.5	5	5.5	6	6.5	7	7.5	8	8.5	9
18	16.88	697.52	1046.3	1395.0	1743.8	2093.0	2441.3	2790.1	3138.8	3488.0	3836.3	4185.0	4534.0	4883.0	5231.0	5580.0	5928.9	6277.7
20	18.81	866.14	1299.0	1732.0	2165.3	2598.4	3031.5	3464.6	3897.6	4330.7	4763.8	5196.8	5629.9	6063.0	6496.0	6929.1	7362.2	7795.3
24	22.63	1253.7	1880.0	2507.0	3134.1	3761.0	4387.8	5014.6	5641.5	6268.3	6895.1	7522.0	8148.8	8775.6	9402.4	10029	10656	11283
26	25.25	1560.7	2341.0	3121.0	3901.9	4682.2	5462.6	6243.0	7023.4	7803.7	8584.1	9364.5	10145	10925	11706	12486	13266	14047
28	27.25	1817.8	2727.0	3636.0	4544.5	5453.4	6362.3	7271.2	8180.0	9088.9	9997.8	10907	11816	12725	13633	14542	15451	16360
30	29.25	2094.4	3142.0	4189.0	5236.0	6283.2	7330.4	8377.6	9424.9	10472	11519	12566	13614	14661	15708	16755	17803	18850
32	31.25	2390.6	3586.0	4781.0	5976.5	7171.9	8367.2	9562.5	10758	11953	13148	14344	15539	16734	17930	19125	20320	21516
34	33.25	2706.4	4060.0	5413.0	6766.0	8119.2	9472.4	10826	12179	13532	14885	16238	17592	18945	20298	21651	23004	24358
36	35.25	3041.8	4563.0	6084.0	7604.5	9125.4	10646	12167	13688	15209	16730	18251	19772	21292	22813	24334	25855	27376
42	41.25	4165.4	6248.0	8331.0	10414	12496	14579	16662	18744	20827	22910	24992	27075	29158	31241	33323	35406	37489
48	47.99	5637.8	8457.0	11276	14095	16913	19732	22551	25370	28189	31008	33827	36646	39465	42284	45103	47922	50740
54	53.98	7133.1	10700	14266	17833	21399	24966	28532	32099	35665	39232	42798	46365	49931	53498	57065	60631	64198
60	60.09	8839.2	13259	17678	22098	26518	30937	35357	39777	44196	48616	53035	57455	61875	66294	70714	75134	79553
72	72.10	12726	19089	25451	31814	38177	44540	50903	57266	63628	69991	76354	82717	89080	95443	101805	108168	114531
84	84.10	17314	25971	34628	43285	51943	60600	69257	77914	86571	95228	103885	112542	121199	129856	138514	147171	155828

FPS TO GPM: GPM = (PIPE ID)² X VELOCITY IN FPS X 2.45

GPM TO FPS: $FPS = \frac{GPM}{(ID)^2 \times 2.45}$

FPS X .3048 = MPS

GPM X .0007 = GPD

GPM X 3.7878 = L

www.meterytech.com